The GroundWire

ISSUE 2012-07

Poindexter's Points

My Addiction

When most people think of addiction they think of substance or alcohol addiction. It could also be food, certain TV shows, cars, exercise, or any other number of things.

I have an addiction, but did not realize it until I had to go into the hospital. I knew something was missing from my life that I craved. It was ham radio.

The hospitals and rehab facilities frown upon putting up an antenna, either inside or out, at their facilities. I tried using my trusty handheld but with all of the electronics in the concrete rooms with thick glass it was difficult to make contact. But one night I was able to reach the club net. The effort to do so was staggering. I had to hang out the window, point the antenna to the south east as far as I could, and was able to talk to Johnny, who was that evening's net control operator.

After the contact my addiction returned to the surface. I saw how much I missed the net, and started seeing how much I also missed the meetings and personal contacts with the club members and the rest of the ham radio world.

After being in hospitals from August 2011 to April 2012, I realized how much ham radio meant to me, not just talking on the air, but also going to meetings, helping with the Head for the Hills, or any other project or training.

Good news for me is I am back at home, I am mobile, and ready to go. I'm really looking forward to Hamcom, Field Day, RACES, and anything else that comes up.

People can say what they want about ham radio, but it is the group of people pulling in the same direction to help in any way they can, be it emergency training or working with the community.

Long live ham radio.

73,

Tom / KE5GKK

In This Issue

What is it??

Send your guess to n5txn.be@gmail.com.
Winner will be revealed next month.

ANSWER: Drake TR4C - 2meter portable

Russ KX5G is the winner!!

Here is July's mystery … What Is It??

Dr. John's Technical Stuff

A few simple CW transmitters for 630 meters

This month I am going to talk a little bit about my experiences with the development of a viable CW transmitter for 630 meters. As this is truly an experimenter's band, the prospect of an off-the-shelf solution was neither likely to be found nor desired. Fortunately CW transmitters can be very easy to design and implement and the skills learned in their development are useful in other areas of amateur radio. In short, this ***IS*** your father's amateur radio…

After the announcement of the 630-meter band on Valentine's Day 2012, a number of kit developers began marketing to US amateurs. Up until this point, most of the market was in Australia and select European countries and most are in the $300-$400 price range. One was an all mode software defined radio developed by a VK and marketed stateside by a ham in New Hampshire under the name of "Genesis". While reported to be a fairly easy kit, the board comes partially populated and requires band pass filters to be wound for the desired frequencies in addition to a handful of through-hole components. The transmitter puts out about 10 watts and while it is all-mode, I really needed about 60 watts to achieve the 1-watt EIRP that is likely to be approved as legal limit for the band.

The next model was developed as a full SMT kit by a group of Finn's. Known as the JUMA TX-500, the kit touted a 65 watts output and while I did not need it, a receive down converter to convert signals at 472 up to the 80m band, allowing the use of a conventional ham rig which usually has been sensitivity on the 80m band than below the broadcast band. The price tag was impressive as well – nearly $500 plus a European value added tax. This was a bit of a turn off for me and the idea of SMT was not appealing as well as the unit had hundreds of parts. Also, after a few emails asking questions, the Finn's stopped responding. I guess they were not used to having someone take such an interest in their product and they may not again J

I had also considered using my newly modified SWR analyzer as an RF source and "rolling my own" high power amp. As much as I wanted to be able to say that the analyzer RF source was a workable solution, the unit has stability issues and tends to drift. You can observe this by looking at the frequency counter.

After a little more searching on the Internet, I somehow stumbled onto an inconspicuous Welsh website of Rog, GW3UEP, which I had missed on previous searches. Looking around his site, it was obvious that Rog was very knowledgeable and experienced in the operating at 500kc and below, having undertaken a number of mobile operations near the ocean and making good contacts with a number of hams on the continent as well as Ireland. Rog had just what I needed – a schematic for a simple but stable VFO/driver on 500kc that could be easily modified for 472kc as well as power amps for 25 watts and 100 watts on 472kc. After several emails, Rog proved to be very helpful and before I knew it, I had ordered parts for the VFO/driver and both models of the PA deck – less than $100 and I had enough parts for about 10 transmitters! I should go into business selling these things! (Authors note: most parts houses like Mouser follow the same model of selling bulk parts for cheaper than singles. If you were to buy parts individually for this project, you would have paid about $50 for a single transmitter – why not spend $50 more and have enough parts for 10? Good if something breaks!)

I started with the VFO/driver, using a 3 X 5 copper clad board and "dead bug" construction style.

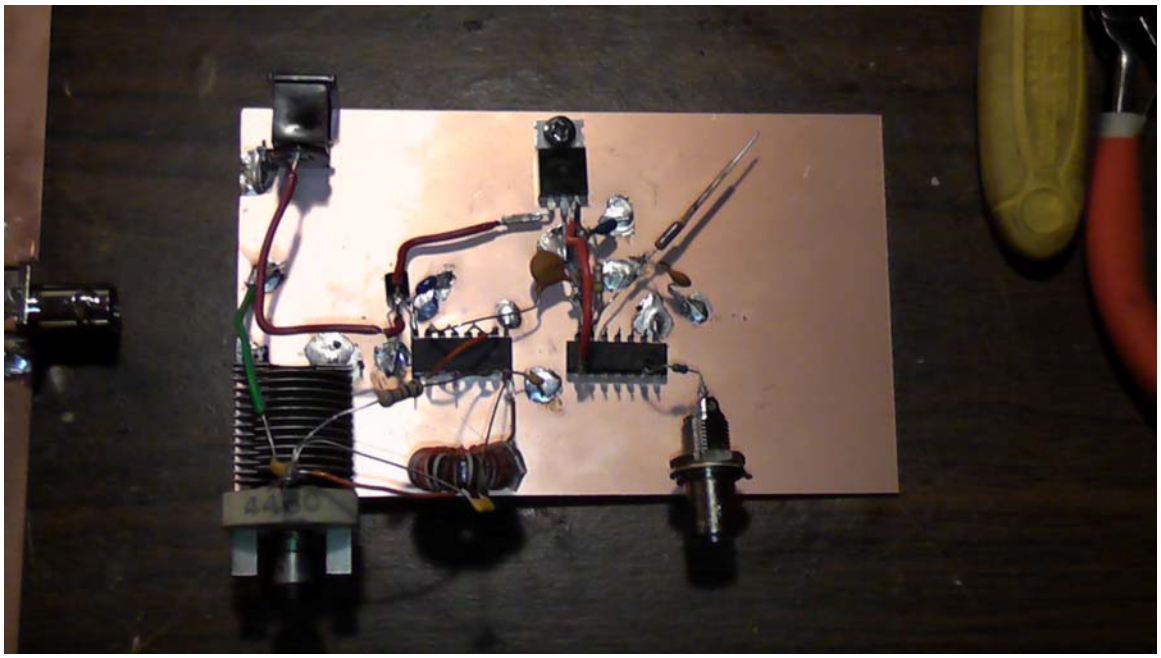

472kc VFO/driver

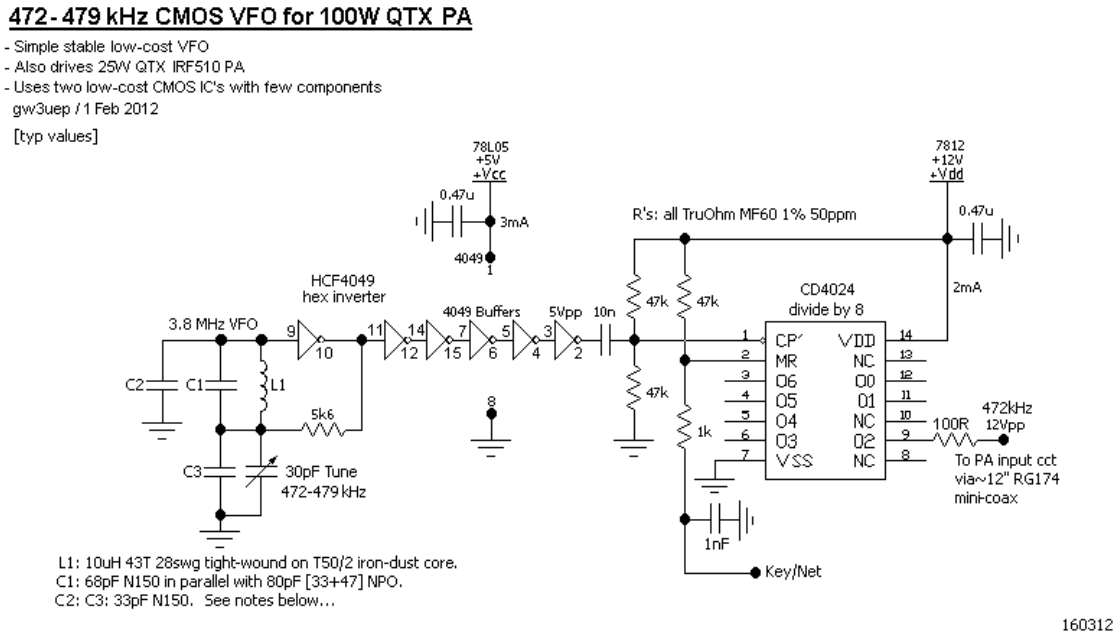

Divide by 8 frequency divider for 472kc with 12v p-p driver – cheap and simple

The design is simple, very simple in fact, utilizing a parallel resonance network (literally a capacitor and coil in parallel) on 3.8 MHz. 80m is a popular place to build a frequency divider on the 630m band as divide by 8 semiconductors are very common and CHEAP!. The signal from 3.8 MHz is fed through a series of buffers on a hex inverter chip and then into a divide by 8 CMOS device. The output of this VFO is 12V peak-to-peak and right in the middle of the 630m band. If additional waveform shaping is not implement-

ed, this driver produces a very clean waveform with click-free shaping. The only thing you have to remember about this VFO is that you need to find the signal with this highest amplitude – don't just pick a carrier and call that 472kc… check it with a frequency counter. Earlier experiments showed that my fundamental signal was down near 200kc and I was using a harmonic that happened to fall in the part of the band I was using. CHECK THE FREQUENCY!

Next was the 25-watt power amplifier. I have to say, I learned a tremendous amount from this part of the project and really set the stage for building the 100-watt power amplifier that I will discuss later. The 25-watt model uses an IRF-510 MOSFET as the final amplifier operating in class-D with waveform shaping on the drain power feeder that controls the rise and fall time on keying. The other plus is that the IRF-510 is very forgiving of mistreatment and they are cheap. When they blow up, though, they sound like a shotgun going off!

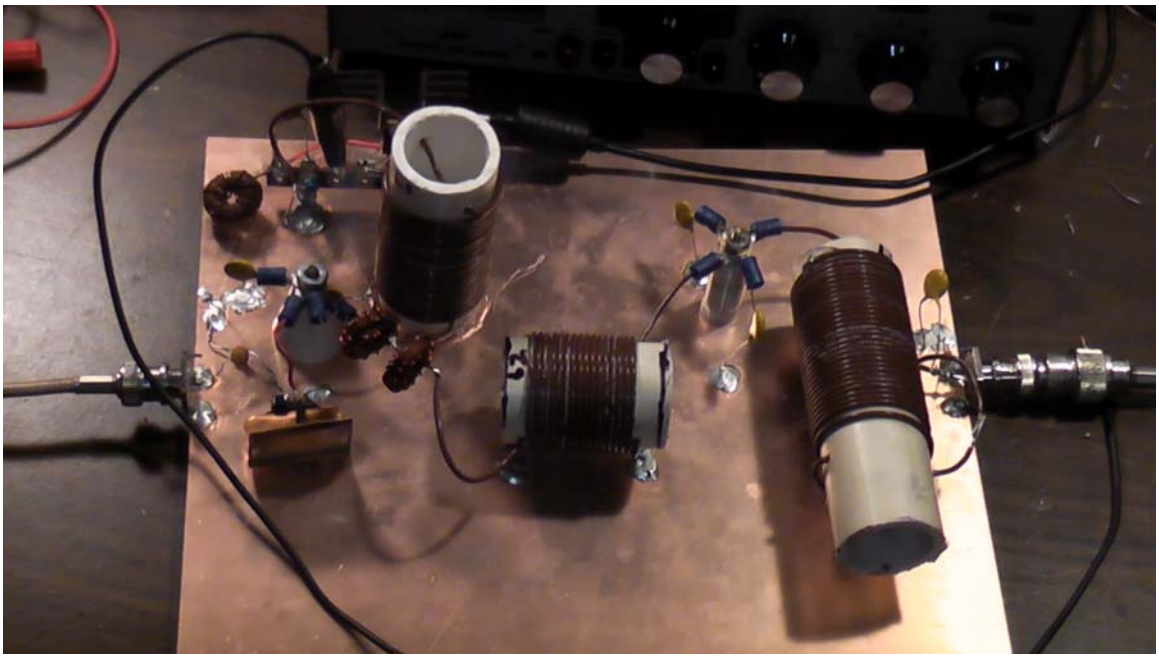

25-watt PA with output filtering for 472kc. The IRF-510 MOSFET is located on the left hand side, just right and down from the BNC connectors. Its enshrouded in a homebrew copper heat sink. Key shaping and powering of the drain on the MOSFET is accomplished by a transistor on the terminal strip at the top left of the board.

As stated earlier, this was the trial by fire part of the project. Having worked with tubes in the past, the MOSFET was a logical choice, not only because of their operating efficiency but because MOSFETs behave much like a vacuum tube – they are either completely on or completely off. Class-D is accomplished on this amp by way of a shunt diode with a leakage resistance across the input from the driver circuit. Based on some of the other variations on accomplishing class-D, this was a very novel approach and one that I appreciate. It also ensures efficiencies greater than 80%. One of the most valuable lessons that I learned in this phase of the project is that variable coils would have been very helpful. Simply winding a coil to spec and checking the inductance with an RF bridge is usually not the best way to do it and you have really have to tweek the coils for waveform and power output. A scope and power meter calibrated for 472 kc is very valuable.

Probably the most significant discovery that I learned or re-learned is that SWR meters that work well between 1.8 and 28 MHz rarely work well below 1.8 MHz and can give all sorts of erroneous values on 472kc. I cannot tell you how much time I spent trying to adjust the output network to match a 50-ohm load with an SWR of 1:1 only to be able to plateau at 2:1! It was maddening but I did learn a lot and feel very confident that when my SWR meter says 2:1, it really means 1:1. In the future I will manage antenna matching through use of the SWR analyzer as well as antenna system current monitoring (more about this in future articles).

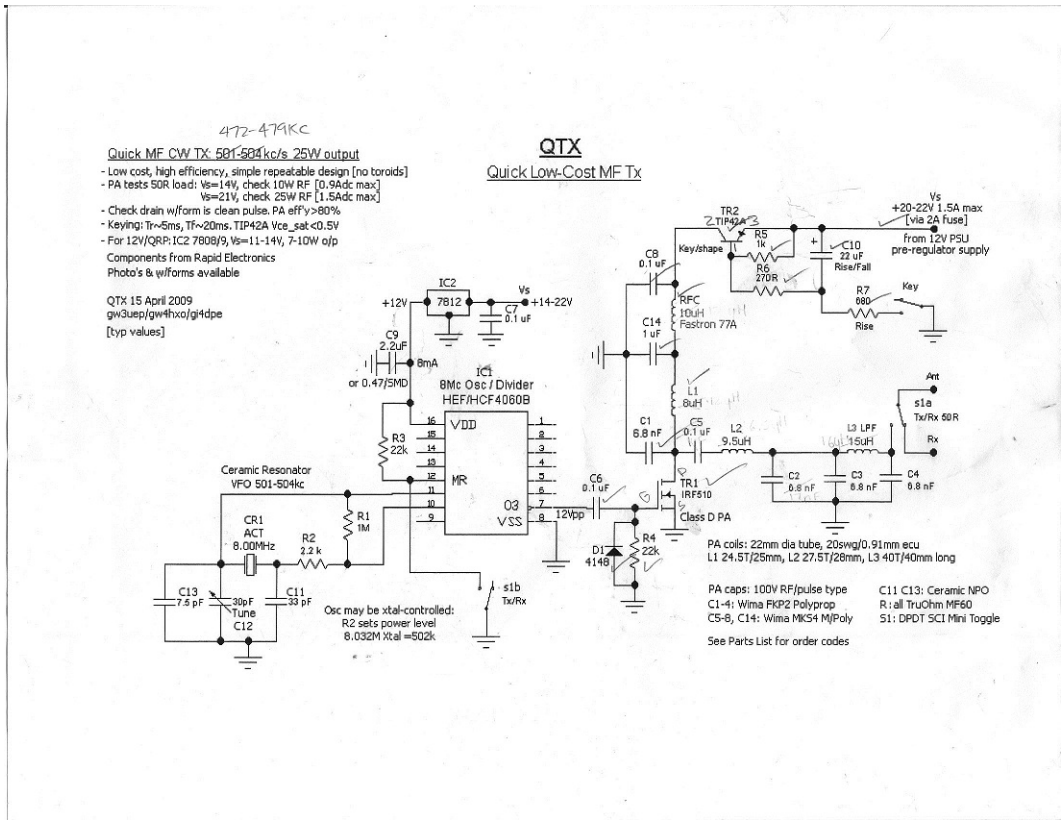

Schematic for the 25-watt version including a different driver/VFO operating at 8 MHz crystal frequency

After working out the operational bugs of the low power amplifier, I started looking for a platform on which to build the 100-watt power amplifier. I was exhausted after working out the 25-watt model so my goal was to build the 100-watt version once and with minimal stomach acid. Fortunately, this was not an unreasonable request.

The 100-watt PA utilizes similar waveform shaping with a beefed up power transistor, more capacity on the RF capacitors and an IRF-540 MOSFET that had a higher drive requirement that the 25-watt version. Higher drive power is accomplished with a transistor-based current boost circuit, driving the gate of the IRF-540. Class-D is still accomplished via a shunt diode and leak resistor.

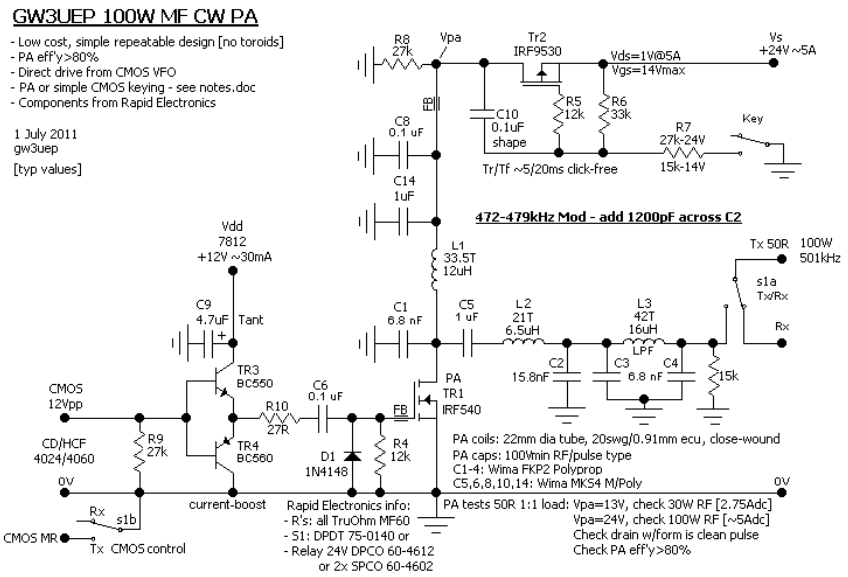

100-watt PA for 472kc

In the development of my transmitter, I chose to use slug tuned RF quality inductors. I was not going to make the mistake of winding my own again, which lacked the robustness of inductance variability.

The PA was built in an "island" configuration on top of a large heat sink, utilizing a variety of conductive pads in dead bug configuration.

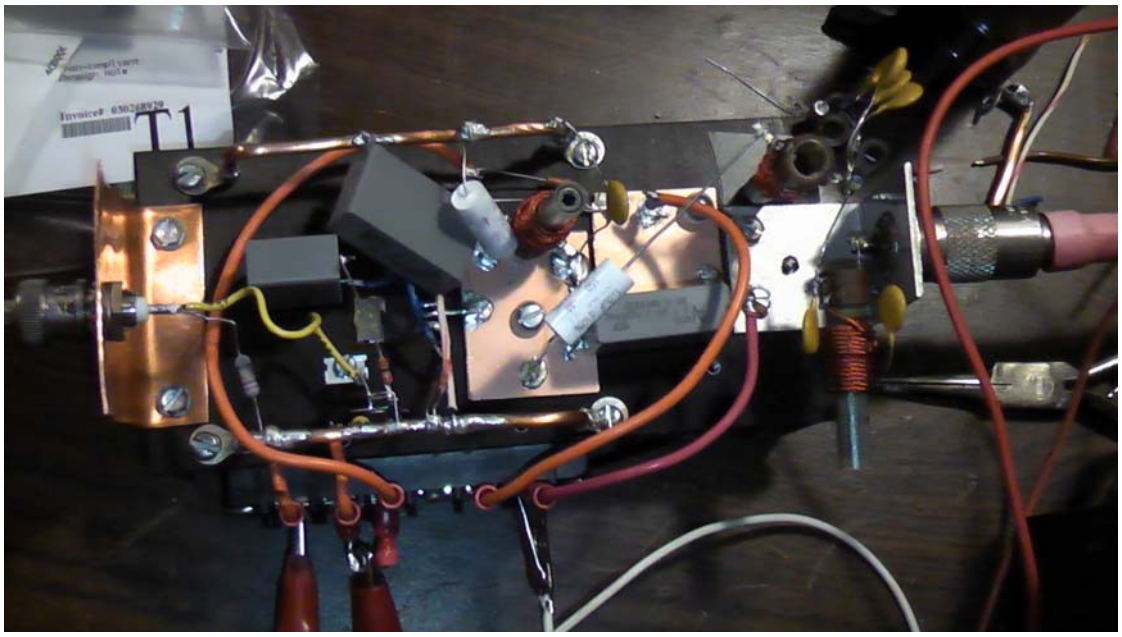

100-watt 472kc PA deck. Parts are layered on top of each other creating a "busy" appearance. The IRF-540 is seen in the center-left of the heat sink.

This configuration has offered good performance and like the IRF-510, the IRF-540 is very forgiving. Output waveforms look great on a scope and are more than permissible for on air use. Harmonic suppression seems to be on the order or 70-80 db and this is evident in the heat generated in the filter network. It's a well-known fact that at these frequencies, it's not uncommon to have as much if not more power in the harmonics as the fundamental. A nice-sized fan blowing across the output section solves this problem. Slug tuned inductors are the way to go and I have headroom on my power requirements to spare so losses incurred are not of concern as long as the PA does not catch on fire.

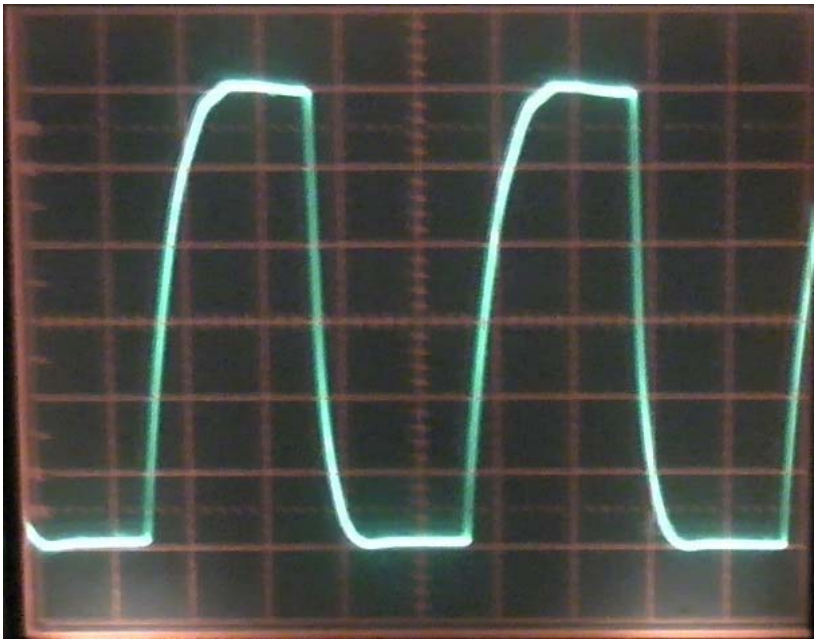

Keying waveform – 2 volts per division – note the nice rounded leading edge and fall-time of the waveform. This is optimized for click-free (harmonic free) CW

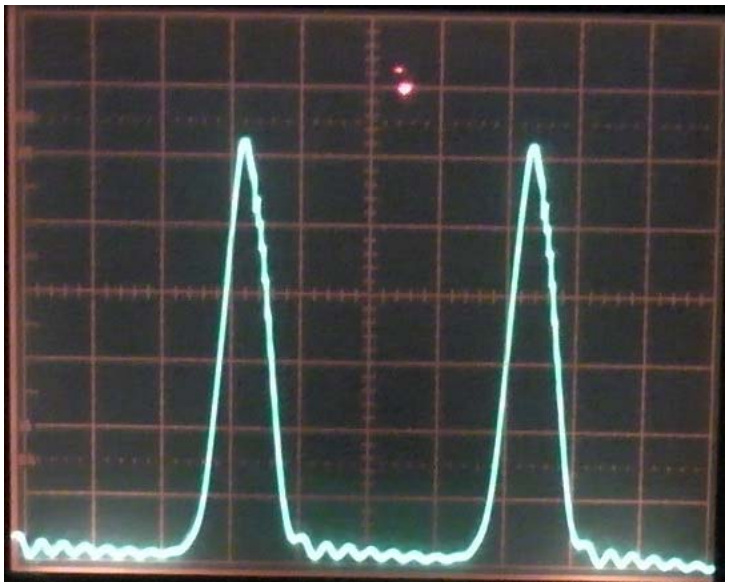

Class-D drain waveform 20 volts per division. The ripple is from variations in the tank circuit and was resolved after these pictures were taken.

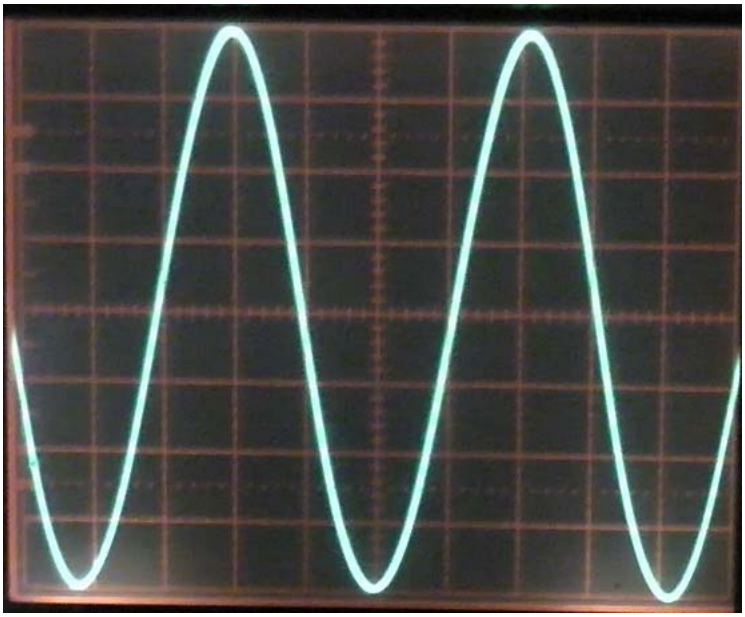

Output waveform – 20 volts per division. It might be a little triangular but it is a pretty nice looking sine wave and I will be happy to put I on the air

So what's next as far as transmitters are concerned? I dunno. I had visions of making modifications to a sideband generator so that the signal could be mixed appropriately for computer generated digital modes. The complication is that those modes really need to be operated in a linear mode and class-D, which is the mode this PA operates under, would generate all sorts of hash in and around the band. Maybe there is a class A or class AB in the cards next. Implementation of the mixing would be easier, in my honest opinion, than getting two MOSFETS to operate in a balanced manner for push-pull but maybe I am over thinking that right now. I will revisit this after the entire system is implemented and ready for air.

This project has been amazingly rewarding and I've learned a tremendous amount in the process. Thanks to Rog, GW3UEP, for his development and consultation time as well as the use of his schematics throughout this article. I could not have accomplished this without his guidance. Also thanks for Paul, KD5IVP, for the use of his scope (my scope shows a the same waveforms but the calibration is off so taking accurate qualitative data is impossible.)

Next month I will detail the construction of the ATU and the implementation of the variometer/loading coil at the antenna feed point. I have a few parts to look for at Hamcom so I can finish up!

Its been a wild, awesome ride so far…

73 and see you in the pileup!

John KB5NJD..

DON'T FORGET!

The next 80-meter fox hunt will happen on **July 7, 2012 around 8:15 am**. This will be a driving hunt and all teams and hunters are asked to meet in the parking lot of Acapulco's Mexican Restaurant (the normal Saturday morning breakfast meeting place for the club) in Desoto on the north side of Beltline and just east of Hampton. Join a team or form your own and give the veterans a run for their money! Hunt boundaries will likely be as far north as I-30, as far south as highway 287, I-45 on the east and highway 360 on the west side! We hope to see you there as the drama unfolds…

And the winner is…

…not so fast… there are important details to tell before I give you the game day stats.

So the foxhunting contingent met for breakfast at Acapulco's in Desoto, the home of the usual Saturday morning breakfast crowd on Saturday, June 02, 2012. As the fox, I had to eat and run, but we had our usual good crowd.

Earlier in the week, I scouted a number of really good hunting locations around the area. Many were further away from the starting point than I wanted to use this time as I had to remind myself that this was only the second time we had done an HF foxhunt and the first that was mobile. I had settled on a fairly straightforward location, about 7 miles from the restaurant, as the RF flies, and about half a mile from my home. I was at Rotary Park in Duncanville. Its important to look for locations near home if you are the fox! It makes for a quick escape!

Upon arrival I laid out about half of the 16 – 50 foot radials, erected the 16-foot fishing pole vertical and connected the loading coil. A quick check of the matching with the antenna analyzer showed a good match. I was ready to go with 4 watts on 3579.5 kc.

The hunt had originally been planned for a 9am start but it was obvious all of the hunters were on site and ready to go early so Jimmy, KB5WIO got everyone's starting mileage logged and when I got the high sign, I kicked off the transmitter. Everything was looking good although I did get some strange looks from people wondering what I was doing.

From this point on, all I could do was sit back and wait. I had no idea how long it might be before the first would arrive if they arrived at all. Fortunately, 38 minutes after the start, Jerry, KB6OJE and Les, K5ITO turned the corner. I had been found. It looks like these guys took 12.2 miles to arrive and used a textbook plan to find me.

The boundaries had been defined as I-35 on the east, Beltline on the south, Clark Rd. in Duncanville on the west, and I-20 on the North. Jerry and Les took an initial heading that was due west down belt line heading right to the broadcast towers. Not to be drawn off sides this time by the lure of the towers, the two headed north to the Lowes on Hampton and I-20. Once again, the heading was due west, so they jumped on I-20 and exited Cedar Ridge in Duncanville. After pulling off the road, the heading was now due south. They were getting very close and looking at the plots on the map, they had resolved my location to within about 200 yards. Heading a bit further west, Jerry and Les wanted to find a heading west of the transmitter and a quick stop at the Duncanville 9th grade school showed it pointing back to vicinity of Cedar Ridge and Wheatland, right next to Rotary Park. Moments later, I was found.

Since Jimmy won last time, we handicapped him and Gene, N5PKZ, by making him use the AM receiver in his HT again. The less sensitive receiver compared to the IC-706's used by Rick and Jerry/Les was a blessing and a curse. Here is how Jimmy recounted the hunt in his own words:

"Gene and I took off as we didn't have a signal at that point. We found a place about in the middle of the search area and had a northwest heading. So we took Wintergreen west to just past hwy 67 pulled over and had a more northwest direction. There at Big Stone Gap and Santa Fe Trail we had a northerly direction. We did a signal check over to Clark road and it got weaker so we came back to Santa Fe and went north. I think we crossed Wheatland about four times. At Wheatland and Santa Fe trail we had a very strong signal

with a due east and west direction. After searching the parking lots and behind the buildings, we went a little east and the signal dropped so we went west and Gene spotted John in the park to the north. It was great fun and I am looking forward to the next one."

Jimmy and Gene arrived at the 65-minute mark, running just a little over 5 miles further than Jerry and Les has. Good work Jimmy and Gene!

Rick, KJ5UY, originally had a #2 riding shotgun but a scheduling conflict resulted in a solo effort. A coax problem further added to some frustration but in the end, Rick made it to the park. Rick has a few divergent headings on his map whose sources were unknown and may have been related to the coax problem but he ultimately found headings that pointed back to the park and arrived in 103 minutes and about 38 miles. Rick's MFJ attenuator is very nice and makes adjusting signal level much easier than playing with the menus on the IC706.

A couple of notable items:

1. The target site was near my house. I wondered if anyone would show up at my house given that the location is close.

2. Because of receiver saturation in at least one vehicle, I made the on-the-fly decision to reduce the number of radials to reduce the field strength. This worked but it made it harder, in my opinion, for the other two mobiles that were not nearly as close. After rolling up several radials, it occurred to me that at least two of the mobiles had IC706's so they had both RF-gain and attenuators in their radio to manage signal overload. Signal was down about 12 db in the near field after rolling up radials. In the future the radials will stay out and guys can adjust their gain and use attenuators.

3. Once again it has been shown that working the boundaries and getting far enough away from the previous location where a heading was taken is an absolute necessity. Jerry and Les made this look like an art form today.

4. Jimmy and Gene found that because of the less sensitive receiver, they had to redefine their boundaries and systematically rule out where the transmitter was not located. Like an onion, they peeled away the layers and that ultimately led to the transmitter site.

I anticipate putting the transmitter on the air for a practice session in the future. If you are working on equipment and would like a signal source to test with, just let me know. It's not a problem to put the transmitter on the air from my home antenna as a test source. I need to start practicing myself as Rick has indicated an interest in hiding the fox for the August hunt.

So get involved with a team next time! We are planning on July 7, 2012 at 8:15 or 8:30 am – whenever I call in on the radio and say I am ready. Come have breakfast with us and jump in a car and go for a ride. We are going to use an expanded boundary next month so come join a team and help out. It only gets harder from here and the more the merrier. Don't make us come pick you up!

73,

John / KB5NJD

"Jetting with Jimmy, KB5WIO"

I had a great time today riding with Jimmy, KB5WIO on the 80 meter fox hunt. We started out at Acapulco's restaurant after breakfast and fellowship with SWDCARC members. Dr. John excused himself early to set up the fox and give the go signal. At the start of the hunt, Dr John's HT signal into the repeater had a little noise in it.....Hmmmm, must be some distance from the repeater. The fox was coming in extremely weak on Jerry's receiver, and no signal on Jimmy's receiver. Since we were near the east boundary at the start, Jimmy took us west toward the west boundary. We could hear the signal come to life in the back of the truck as we headed west confirming the right direction. Since we were close to the southern boundary already, Jimmy figured the fox had to be north some. The question was how far west? Jimmy took us to the west boundary stopping occasionally to take bearings. He had the fox honed in to about a quarter mile area, and we started searching parking lots looking for Dr. John's car. The signal was really strong at a major intersection having several parking lots, so we spent time looking where the fox wasn't, but knew it was close. Jimmy's antenna and HT set up gave superb nulls, so we were positive that the street we were on had to be the one. After searching the parking lots, we headed back east and noticed the RX signal was lower, so it had to be on the other side of the parking lots that we concentrated on. We went back west past the parking lots and noticed a park with a car that looked a lot like Dr. Johns, and sure enough, there was Dr. John. We didn't come in first, but we had so much fun, that it didn't matter. Congratulations to "Team Jerry"

Financial Report … June 2012

June-12	Income	Expense	Balance	Petty Cash
General Fund				
Beginning Balance 6/1/12			$2,050.96	
INCOME/EXPENSE				
Dues Income-2012				
Transfer From Matl. Property				
Tranfer Petty Cash income				
TOTAL INCOME	$0.00			
EXPENSES				
TOTAL EXPENSES		$0.00		
TOTAL INCOME/EXPENSE	$0.00	$0.00		
Ending Balance 6/30/2012			$2,050.96	
Special Events Fund				
Beginning Balance 6/1/12			$125.14	
INCOME/EXPENSE				
Trans from General Fund				
TOTAL INCOME	$0.00			
EXPENSES				
TOTAL EXPENSES		$0.00		
TOTAL INCOME/EXPENSE	$0.00	$0.00		
Ending Balance 6/30/2012			$125.14	
Material Property Fund				
Beginning Balance 6/1/12			$1,822.55	
INCOME/EXPENSE				
Dues Income-2012				
Transfer from General Fund				
TOTAL INCOME	$0.00			
EXPENSES				
Telephone Pymt. 01June		$39.68		
Transfer to General Fund				
TOTAL EXPENSES		$39.68		
TOTAL INCOME/EXPENSE	$0.00	$39.68		
Ending Balance 6/30/2012			$1,782.87	
June Balance	$0.00	$39.68	$3,958.97	

2012 Board Members

President

Scott Crappa (KE5NLK)

Vice-President

Ben Barber (K5NEB)

Treasurer

Mike Harang (K5MMH)

Secretary

Jerry Keltner (KB6OJE)

Directors

Paul Dryer (KD5IVP)

Lester Wong (K5ITO)

Rick Ellis (KJ5UY)

Committee Positions

Repeater Trustee

Johnny Roberson (KJ5LB)

Newsletter Editor

Bill Ellis (N5TXN)

Web Master

Bruce Holt (KG1BAH)

MN²

Monday Night Net

Net Time 8:00PM

147.060(+) Primary

444.500(+) Alternate

Minutes of Board Meeting ... June 5, 2012

The meeting was called to order by Scott, KE5NLK at 6:35 pm.
Invocation was given by Ben, K5NEB.
Executive Board members present: Scott, KE5NLK, Ben, K5NEB, Lester, K5ITO, Rick, KJ5UY and Jerry, KB6OJE.
Club members present: Johnny, KJ5LB and Jimmy, KB5WIO.
Guests: None
Minutes: Motion to approve by Ben, K5NEB; Motion 2nd by Rick, KJ5UY . Motion passed.
Treasure Report Motion to approve by Rick, KJ5UY; Motion 2nd by Ben, K5NEB. Motion passed.

COMMITTEE REPORTS

-

Repeater: Both were working on 6 Jun 2012.
VE S**ession:** None
EOC: Nothing new.
Membership: No new ones this month.
Net: There were 11 check-ins last night. Ben, K5NEB, states that they need more Net Control Operators. If you are able to volunteer for this, contact Russ, KX5G by e-mail at russthom@tx.rr.com.
Web: Up and running.
Groundwire: Had a very good one. Keep those articles coming.

OLD BUSINESS

1. Ham Com – 8 & 9 June, 2012. SWDCARC has one table for you to bring the items you want to sell. Be sure to have the price you want and be prepared to spend some time at the table so others can "walk the floor".
2. HT & Mobile radios for club. Need to look into buying 2m HTs for club use.

80m Fox Hunt: The next one is scheduled for July 7th.

NEW BUSINESS

1. Tour d'Italia Bike Ride: The Ellis County ARC is asking for radio operators to assist with this ride. It is scheduled for the weekend between Ham Com and Field Day.
2. Grand Prairie Emergency Coordinator wants to use our Repeater for RACES training.

PROGRAM: Rick, KJ5UY, presentation on Head for the Hills Bike Ride.

Motion to Adjourn was made by Rick, KJ5UY at 7:18 pm.

General Membership Meeting ... June 19, 2012

The meeting was called to order by Scott, KE5NLK at 6:30 pm.

Invocation was given by Rick, KJ5UY.

Minutes: Motion: Rick, KJ5UY; 2nd by Johnny, KJ5LB. Approved? Yes

Treasure Report: Motion: Johnny, KJ5LB; 2nd by Rick, KJ5UY. Approved? Yes

Guests: Steve Clem, N5SLC.

COMMITTEE REPORTS

Repeater: 2m repeated was down yesterday. Air Conditioning went out and temperature rose to 125 degrees in building. Everything back up now.
VE Session: None
EOC: Cedar Hill and DeSoto EOCs were up for the storm. Duncanville EOC was not up.
Membership: No new members.
Net: Only 1 check-in last night because repeater went down.
Web: It is up and running..
Groundwire: It is on the web and had good content.

OLD BUSINESS

80m Fox Hunt – John, KB5NJD, reports that the 2 June fox hunt was won by the team composed of Lester, K5ITO and Jerry, KB6OJE. 2nd Place was team of Jimmy, KB5WIO and Gene, N5PKZ. 3rd Place went to Rick, KJ5UY, whose partner bailed out on him at last minute.

Ham Com – SWDCARC had one table reserved, but it was underutilized. Also, club member attendance was much less than in previous years.

Field Day – This year we will be going as 3F. Larry, KY5S is making a 40m loop for the SSB station. We will have two CW stations, 1 SSB station and 1 Get on the Air (GOTA) station. Make plans now to come out and participate in the set up and in the operation of the stations. If you know of any Boy Scout or Girl Scout groups, invite them to come out and we will get them on the air on the GOTA station either on voice or PSK31. The Saturday evening meal will be burgers and hot dogs. Bring a side dish and heavy on the desserts. Plan to start setting up antennas after breakfast and we are to have access to building at 10 am.

Tour d'Italia Bike Ride – The ride was on 16 June and started and ended in Italy, TX. Jerry, KB6OJE was the only club member participating as a radio operator. Billy, KB5ZZW's wife was a rider in the 40 mile route.

NEW BUSINESS

1. 80m Fox Hunt: John, KB5NJD reports that the next 80m from vehicle Fox Hunt will be Saturday, 7 July. It will start at Acapulco Restaurant at 225 E Belt Line Rd, DeSoto around 8:30am. Plan on getting involved in this educational direction finding activity. If you do not have an antenna, contact John, KB5NJD, or Rick, KJ5UY, or Jerry, KB6OJE, for assistance in building one. To be effective/efficient in finding the "Fox" there needs to be a minimum of two people in each vehicle, so if don't want to drive yourself, contact others about riding with them.

Presentation: Rick, KJ5UY, presented humorous highlights of the Cedar Hill Head for the Hills Bike Ride.

ADJOURN: Motion by Rick, KJ5UY